RxDuino™ Dual CANBUS Shield Reference Design

Reference Designs ARE PROVIDED "AS IS" AND "WITH ALL FAULTS. Arduino DISCLAIMS ALL OTHER WARRANTIES, EXPRESS OR IMPLIED, REGARDING PRODUCTS, INCLUDING BUT NOT LIMITED TO, ANY IMPLIED WARRANTIES OF MERCHANTABILITY OR FITNESS FOR A PARTICULAR PURPOSE

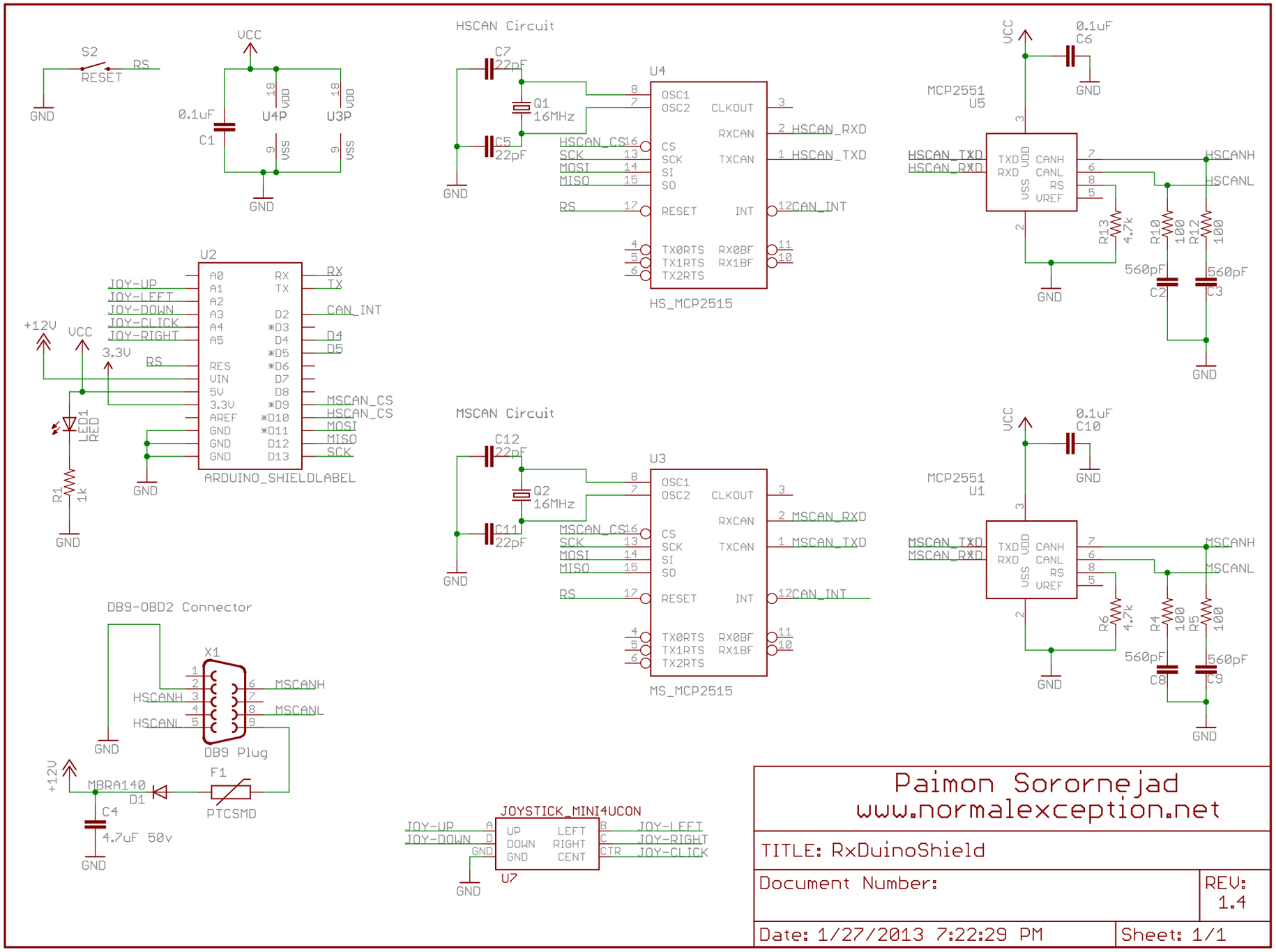

Released under the Creative Commons Attribution Share-Alike License
Design By: Paimon Sorornejad, Based Off of a Design By: Sukkin Pang, Ryan Owens